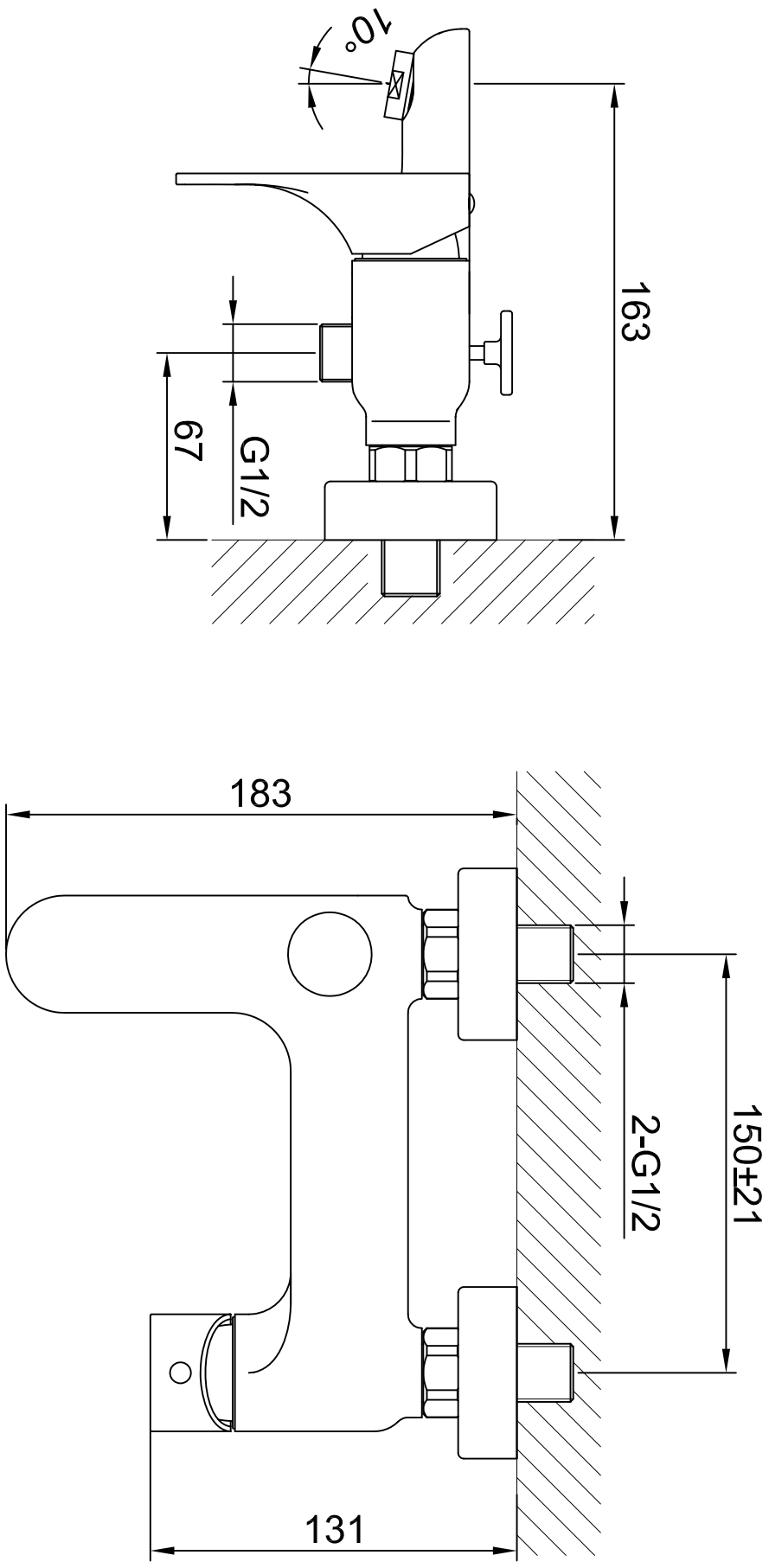
10°
163
67
G1/2
183
2-G1/2
150±21
131